LC DOMINATOR

DOMESTIC HOT WATER HEATERS AND BOILERS

RBI®

RELIABLE. BOLD. INNOVATIVE.

LC DOMINATOR

Indoor/Outdoor, Water Heaters and Hydronic Heating Boilers

LC Dominator boilers and water heaters are standard with ZM coated steel corrosion resistant jacket ideal for outdoor or indoor installations.

The LC Dominator® (LCD) from RBI offers competitively-priced indoor/outdoor units that meet low NOx requirements, while maintaining superior performance and serviceability. The LCD provides dependable performance in rugged environments and process applications, with a wide 400 – 2300 MBH range. At the heart of the unit is a sealed combustion chamber that provides the flexibility of using outside air or mechanical room air for combustion. Priced in line with the atmospheric category heaters, the LCD features smaller vent sizes, resulting in a lower total installation cost.

Standard Equipment

- Finned Copper Tube Heat Exchanger, ASME 160# Max WP, Two-Pass
- Mounted & Wired Flow Switch
- FM Compliant Gas Train
- Sealed Combustion Chamber – Near Condensing
- Mounted ASME Relief Valve (50# Boilers, 125# Water Heaters)
- Pump Delay Control
- Factory Fired Tested
- ZM Coated Steel Corrosion Resistant Jacket (Indoor/Outdoor)

Dependable, Efficient Performance

- Uginox Alloy Stainless Steel Burners
- Glass Lined Headers
- On/Off, All Sizes 2-Stage, 600-2300
- Cat I Venting (Vertical)
- Cat III Thru-Wall (up to 35' Equivalent)

Easy to Install and Service

- Spin-Off Pilot Service Portal for Easy Access (Sizes 750-2300)
- Slide-Out Heat Exchanger
- Side Intake, All Sizes
- Rear Intake, Sizes 750-2300
- Stackable Frame with Seismic Approval (up to Zone 4)
- Horizontal/Vertical Venting Options
- Power Vent Option for Thru-Wall Venting
- Low Voltage Controls
- Direct Vent (up to 35' Equivalent)

Optional Features

- Bronze Headers
- Cupro-Nickel Heat Exchanger
- Outdoor Installation
- Freeze Protection Package
- CSD-1Compiant Gas Train and Controls
- Barometric Damper

Outdoor Approved

Unlike traditional atmospheric outdoor units, the fan-assisted combustion design of the LCD provides reliable operation. Outdoor concerns associated with pilot outages and poor combustion are eliminated with the LCD's proven pilot ignition and fan-assisted combustion systems.

Proven Pilot Ignition System

The unique pilot ignition is safer and more reliable than the hot surface systems commonly used on other manufacturers' equipment.

The system employs a burner tube as a pilot. Gas is injected into a single burner and ignited by spark. A flame rod then monitors the pilot tube flame. Once the pilot is proven, the main gas valves are powered and the remaining burner tubes are safely lit. This proven system offers greater dependability and is superior to fragile HSI systems that can require frequent replacement.

Smart Service Design

Ease of installation and service are trademarks of all RBI water heaters and boilers. Critical components are fully accessible for faster, easier service and maintenance calls. The LCD's sealed combustion chamber features a slide-out heat exchanger for less time-consuming service and repair. At just 29.5" wide, the LCD fits easily through standard doorways.

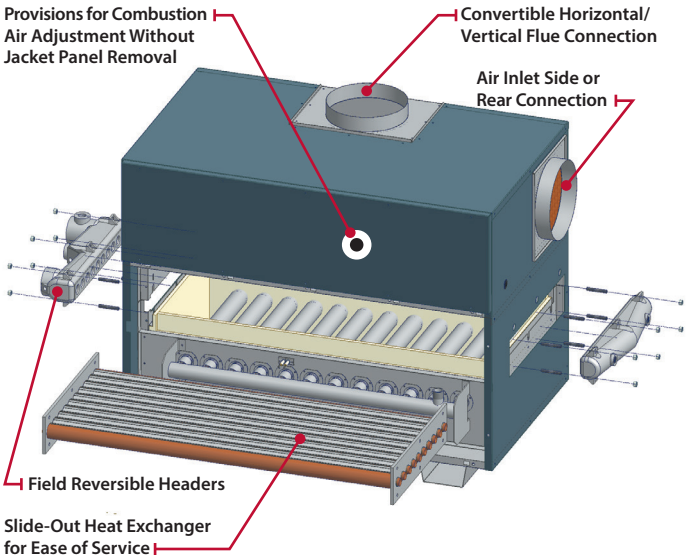

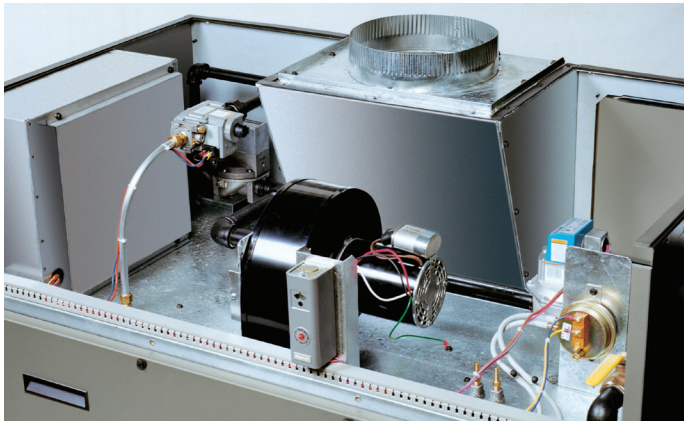

Critical components are located conveniently at the top of the boiler for easy access.

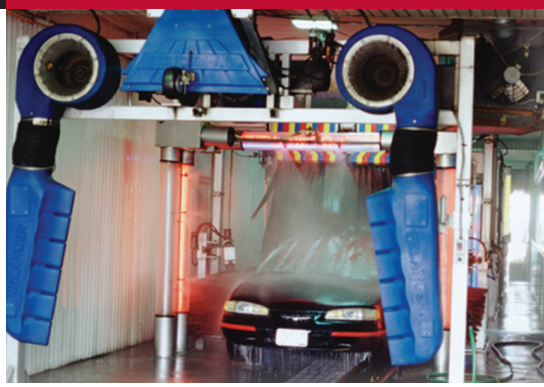

Rack and Stack

The LCD offers greater flexibility and ease of installation in a space-saving design that leaves more elbowroom in the mechanical room. A rugged frame and stackable design allow for the installation of two units in one small footprint.

Wide Variety of Venting Options

The LCD provides added flexibility and ease of installation with multiple venting options and configurations. The sealed combustion chamber minimizes heat loss and requires less clearance from combustible walls.

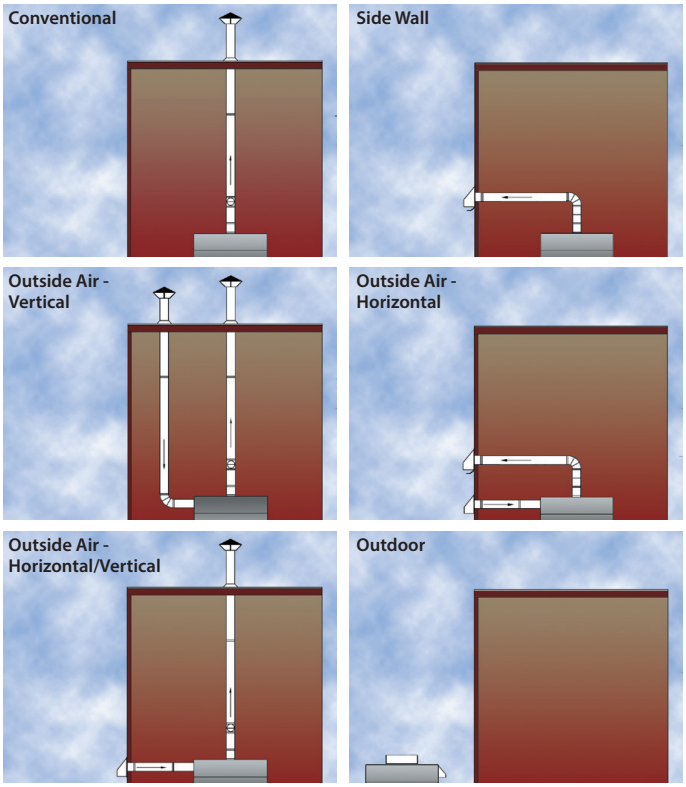

Quality Construction

The LCD features a robust compact design using high quality materials for dependable performance. From our stainless steel burn tubes to our glass lined headers the LCD is built not only to perform efficiently, it's built to last. The LCD's design requires fewer blowers and gas valves to achieved staged firing. Fewer components mean reduced complexity and easier serviceability.

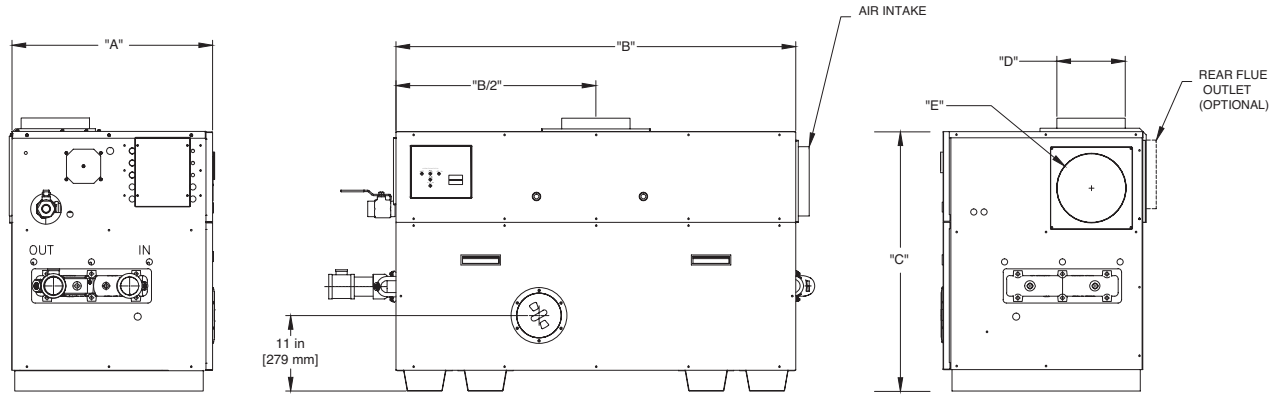

Left Side **Front** **Right Side**

Note: Dimensions are approximate and should not be used to "rough-in" equipment.

Models
LB = Boiler
LW = Water Heater

LC Dominator — Dimensions and Ratings*

Size	Input		Boiler Output		Length Dim. A		Width Dim. B		Height Dim. C		Flue Vent Dim. D		Connections Gas In.		Connections Water	Ducted Air Dim. E		Shipping Weight	
	MBH	kW	MBH	kW	In.	mm	In.	mm	In.	mm	In.	mm	Nat.	LP	In.	In.	mm	lbs.	kgs.
400	399	*117*	335	*98*	29-5/16	*745*	28-5/8	*727*	37-15/16	*964*	6	*152*	.75	*.75*	1.50	6	*152*	515	*234*
600	600	*176*	504	*148*	29-5/16	*745*	35-1/8	*892*	37-15/16	*964*	7	*178*	1	*1*	2.50	8	*203*	635	*288*
750	750	*220*	630	*184*	29-5/16	*745*	41-5/8	*1,057*	37-15/16	*964*	8	*203*	1	*1*	2.50	8	*203*	710	*322*
1050	1,050	*308*	882	*258*	29-5/16	*745*	58-3/8	*1,483*	37-15/16	*964*	10	*254*	1.25	*1.25*	2.50	10	*254*	915	*415*
1200	1,200	*352*	1,008	*295*	29-5/16	*745*	71-3/8	*1,813*	37-15/16	*964*	12	*305*	1.25	*1.25*	2.50	12	*305*	972	*441*
1480	1,480	*434*	1,243	*364*	29-5/16	*745*	71-3/8	*1,813*	37-15/16	*964*	12	*305*	1.50	*1.50*	2.50	12	*305*	1,000	*454*
1650	1,650	*483*	1,386	*406*	29-5/16	*745*	77-7/8	*1,978*	37-15/16	*964*	14**	*356***	1.50	*1.50*	2.50	12	*305*	1,075	*488*
1970	1,970	*577*	1,655	*485*	29-5/16	*745*	97-3/8	*2,473*	37-15/16	*964*	14**	*356***	1.50	*1.50*	2.50	12	*305*	1,270	*577*
2300	2,300	*674*	1,886	*553*	29-5/16	*745*	103-7/8	*2,638*	37-15/16	*964*	14**	*356***	2	*1.50*	2.50	12	*305*	1,280	*581*

* Ratings reflect boilers only. For boiler efficiency information please visit www.ahridirectory.org.
** 14" oval to round flue vent transition piece.

LC Dominator Boilers — Heat Exchanger Temperature Rise/Pressure Drop

Size	15°F		8.3°C		20°F		11.1°C		25°F		13.9°C		30°F		16.7°C		35°F		19.4°C	
	Flow Rate	Pres Drop	Flow Rate	Pres Drop	Flow Rate	Pres Drop	Flow Rate	Pres Drop	Flow Rate	Pres Drop	Flow Rate	Pres Drop	Flow Rate	Pres Drop	Flow Rate	Pres Drop	Flow Rate	Pres Drop	Flow Rate	Pres Drop
	GPM	Ft	ΔL/s	kPa	GPM	Ft	ΔL/s	kPa	GPM	Ft	ΔL/s	kPa	GPM	Ft	ΔL/s	kPa	GPM	Ft	ΔL/s	kPa
400	44.7	0.73	*2.8*	*2.1*	33.5	0.43	*2.1*	*1.3*	26.8	0.28	*1.7*	*0.8*	-	-	-	-	-	-	-	-
600	67.2	1.92	*4.2*	*5.7*	50.4	1.13	*3.2*	*3.3*	40.3	0.75	*2.5*	*2.2*	33.6	0.53	*2.1*	*1.6*	28.8	0.40	*1.8*	*1.2*
750	84.0	3.47	*5.3*	*10.2*	63.0	2.04	*4.0*	*6.0*	50.4	1.35	*3.2*	*4.0*	42.0	0.96	*2.6*	*2.8*	36.0	0.72	*2.3*	*2.1*
1050	-	-	-	-	88.2	5.40	*5.6*	*15.9*	70.6	3.57	*4.5*	*10.5*	58.8	2.55	*3.7*	*7.5*	50.4	1.91	*3.2*	*5.6*
1200	-	-	-	-	100.8†	8.51	*6.4*	*25.1*	80.6	5.63	*5.1*	*16.6*	67.2	4.01	*4.2*	*11.8*	57.6	3.02	*3.6*	*8.9*
1480	-	-	-	-	124.3†	8.30	*7.8*	*24.4*	99.5	5.49	*6.3*	*16.2*	82.9	3.92	*5.2*	*11.5*	71.0	2.94	*4.5*	*8.7*
1650	-	-	-	-	-	-	-	-	110.9	7.34	*7.0*	*21.6*	92.4	5.24	*5.8*	*15.4*	79.2	3.94	*5.0*	*11.6*
1970	-	-	-	-	-	-	-	-	-	-	-	-	110.3	9.15	*7.0*	*27.0*	94.6	6.88	*7.0*	*28.8*
2300	-	-	-	-	-	-	-	-	-	-	-	-	125.7†	12.45	*7.9*	*36.7*	107.8	9.36	*6.8*	*27.6*

† Flow exceeds recommended maximum use a greater temperature rise or consult manufacturer. Cupro-nickel heat exchanger should be considered.

LC Dominator Water Heaters — Hourly Recovery Capacity ΔT (GPH & LPH)***

Size	40°F	22°C	60°F	33°C	80°F	44°C	100°F	56°C	120°F	67°C	140°F	78°C
600	1,477	*5,582*	984	*3,721*	738	*2,791*	591	*2,233*	492	*1,861*	422	*1,595*
750	1,846	*6,977*	1,230	*4,651*	923	*3,488*	738	*2,791*	615	*2,326*	527	*1,993*
1050	2,584	*9,768*	1,723	*6,512*	1,292	*4,884*	1,034	*3,907*	861	*3,256*	738	*2,791*
1200	2,953	*11,163*	1,969	*7,442*	1,477	*5,582*	1,181	*4,465*	984	*3,721*	844	*3,189*
1480	3,642	*13,768*	2,428	*9,178*	1,821	*6,884*	1,457	*5,507*	1,214	*4,589*	1,041	*3,934*
1650	4,061	*15,349*	2,707	*10,233*	2,030	*7,675*	1,624	*6,140*	1,354	*5,116*	1,160	*4,385*
1970	4,848	*18,326*	3,232	*12,217*	2,424	*9,163*	1,939	*7,330*	1,616	*6,109*	1,385	*5,236*
2300	5,729	*21,657*	3,820	*14,438*	2,865	*10,828*	2,292	*8,663*	1,910	*7,219*	1,637	*6,188*

*** For water heater efficiency information please visit www.ahridirectory.org.
Boilers & Water Heaters not available for sale in Canada due to NRCan regulations.

RELIABLE. BOLD. INNOVATIVE.

260 North Elm Street, Westfield, MA 01085
Tel. 833-265-5371
7555 Tranmere Drive, Mississauga, Ontario L5S 1L4
Tel. (905) 670-5888
www.rbiwaterheaters.com

A MESTEK COMPANY

In the interest of product improvement, RBI reserves the right to make changes without notice.